Magic Chef®

REFURBISHED

0.9 Cu. Ft.
Countertop Microwave Oven

User's Manual

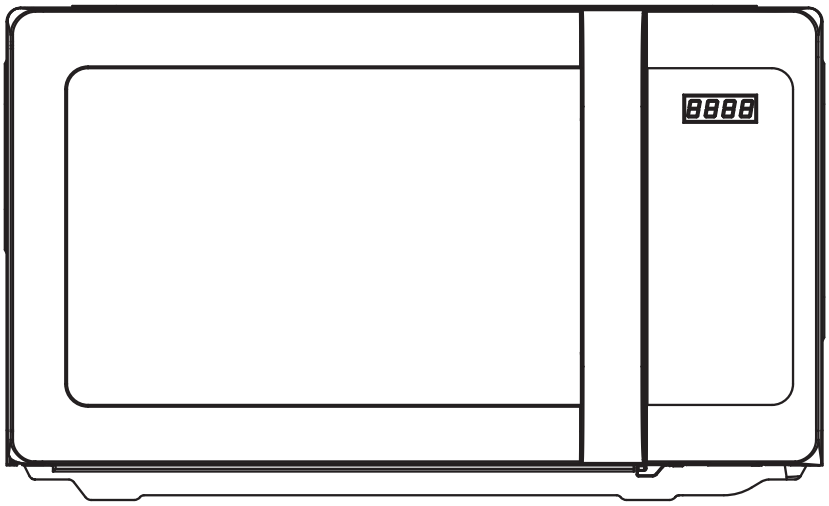

Model R-MCD993W/R-MCD993B/ R-MCD993R

PLEASE READ THIS MANUAL CAREFULLY BEFORE USING YOUR MICROWAVE OVEN AND KEEP IT FOR FUTURE REFERENCE.

Product Registration

Thank you for purchasing a Magic Chef product. The first step to protect your new product is to complete the product registration on our website: **www.arcaugusta.com/register-my-product.htm**. The benefits of registering your product include the following:

1. Registering your product will allow us to contact you regarding a safety notification or product update.
2. Registering your product will allow for more efficient warranty service processing when warranty service is required.
3. Registering your product could act as your proof of purchase in the event of insurance loss.

Once again, thank you for purchasing a **refurbished** Magic Chef product.

PRECAUTIONS TO AVOID POSSIBLE EXPOSURE TO EXCESSIVE MICROWAVE ENERGY

(a) **Do not attempt to operate this oven with the door open** since open-door operation can result in harmful exposure to microwave energy. It is important not to defeat or tamper with the safety interlocks.

(b) **Do not place any object** between the oven front face and the door or allow soil or cleaner residue to accumulate on sealing surfaces.

(c) **Do not operate the oven if it is damaged.** It is particularly important that the oven door close properly and that there is no damage to the: (1) door (bent), (2) hinges and latches (broken or loosened), (3) door seals and sealing surfaces.

(d) The oven should not be adjusted or repaired by anyone except properly qualified service personnel.

TABLE OF CONTENTS

• PRECAUTIONS TO AVOID POSSIBLE EXPOSURE TO EXCESSIVE MICROWAVE ENERGY 1
• IMPORTANT SAFETY INSTRUCTIONS 2
• FEDERAL COMMUNICATIONS COMMISSION
RADIO FREQUENCY INTERFERENCE STATEMENT 3
• GROUNDING INSTRUCTIONS 3
• INSTALLATION 4
• SPECIFICATIONS 5
• FEATURES DIAGRAM 6
• FEATURES DIAGRAM (continued) 7
• OPERATION PROCEDURE 8
• CONTROLS 9
SETTING THE CLOCK 9
+30SEC 9
WEIGHT DEFROSTING 10
TIME DEFROSTING 10
MICROWAVE COOK 11
COOKING IN TWO STAGES 11
AUTO COOK 12
KITCHEN TIMER 13
CHILD SAFETY LOCK 13
TO STOP THE OVEN WHILE THE OVEN IS OPERATING 13
• CARE OF YOUR MICROWAVE OVEN 14
• BEFORE YOU CALL FOR SERVICE 15
• CARE AND CLEANING 15
• QUESTIONS AND ANSWERS 16
• COOKING INSTRUCTIONS 17
• USE YOUR MICROWAVE OVEN SAFELY 18
• ARCING 18

HDUS_MCD993W,MCD993B,MCD993R_KOR9GRBW~(영).indd 1 2018-01-05 오후 1:24:21

IMPORTANT SAFETY INSTRUCTIONS

When using electrical appliances, basic safety precautions should be followed, including the following:

WARNING-To reduce the risk of burns, electric shock, fire, injury to persons or exposure to excessive microwave energy:

1. Read all instructions before using the appliance.
2. Read and follow the specific “PRECAUTIONS TO AVOID POSSIBLE EXPOSURE TO EXCESSIVE MICROWAVE ENERGY” found on page 1.
3. This appliance must be grounded. Connect only to properly grounded outlet. See “GROUNDING INSTRUCTIONS” found on page 3.
4. Install or locate this appliance only in accordance with the provided installation instructions.
5. Some products such as whole eggs and sealed containers - for example, closed glass jars are able to explode and should not be heated in this oven.
6. Use this appliance only for its intended use as described in this manual. Do not use corrosive chemicals or vapors in this appliance. This type of oven is specifically designed to heat, cook, or dry food. It is not designed for industrial or laboratory use.
7. As with the appliance, close supervision is necessary when used by children.
8. Do not operate this appliance if it has a damaged cord or plug, if it is not working properly, or if it has been damaged or dropped.
9. This appliance should be serviced only by qualified service personnel.
   Contact nearest authorized service facility for examination, repair or adjustment.
10. Do not cover or block any openings on the appliance.
11. Do not store this appliance outdoors. Do not use this product near water — for example, near a kitchen sink, in a wet basement, near a swimming pool, or similar locations.
12. Do not immerse cord or plug in water.
13. Keep cord away from heated surfaces.
14. Do not let cord hang over edge of table or counter.
15. When cleaning surfaces of door and oven that comes together on closing the door, use only mild, non-abrasive soaps or detergents applied with a sponge or soft cloth.
16. To reduce the risk of fire in the oven cavity:
    a) Do not overcook food. Carefully attend appliance when paper, plastic, or other combustible materials are placed inside the oven to facilitate cooking.
    b) Remove wire twist-ties from paper or plastic bags before placing bag in oven.
    c) If materials inside the oven ignite, keep oven door closed, turn oven off, and disconnect the power cord, or shut off power at the fuse or circuit breaker panel.
    d) Do not use the cavity for storage purposes. Do not leave paper products, cooking utensils, or food in the cavity when not in use.
17. Liquids, such as water, coffee, or tea are able to be overheated beyond the boiling point without appearing to be boiling due to surface tension of the liquid. Visible bubbling or boiling when the container is removed from the microwave oven is not always present. THIS COULD RESULT IN VERY HOT LIQUIDS SUDDENLY BOILING OVER WHEN A SPOON OR OTHER UTENSIL IS INSERTED INTO THE LIQUID.

    To reduce the risk of injury to persons:
    a) Do not overheat the liquid.
    b) Stir the liquid both before and halfway through heating it.
    c) Do not use straight-sided containers with narrow necks.
    d) After heating, allow the container to stand in the microwave oven for a short time before removing the container.
    e) Use extreme care when inserting a spoon or other utensil into the container.
18. Do not use this microwave oven to heat corrosive chemicals (for example, sulfides and chlorides). Vapors from such corrosive chemicals may interact with the contact and springs of the safety interlock switches thereby rendering them inoperable.
19. Keep the waveguide cover clean at all times.
    Wipe the oven interior with a soft damp cloth after each use. If you leave grease or fat anywhere in the cavity it may overheat, smoke or even catch fire when next using the oven.
20. Never heat oil or fat for deep frying as you cannot control the temperature and doing so may lead to overheating and fire.
21. Do not operate the oven without the glass tray in place. Be sure it is properly sitting on the rotating base.

SAVE THESE INSTRUCTIONS

HDUS_MCD993W,MCD993B,MCD993R_KOR9GRBW~(영).indd 2 2018-01-05 오후 1:24:21

FEDERAL COMMUNICATIONS COMMISSION RADIO FREQUENCY INTERFERENCE STATEMENT

WARNING:
This equipment generates and uses ISM frequency energy and if not installed and used properly, that is in strict accordance with the manufacturer's instructions, may cause interference to radio and television reception.
It has been type-tested and found to comply with limits for an ISM Equipment pursuant to part 18 of FCC Rules, which are designed to provide reasonable protection against such interference in a residential installation.
However, there is no guarantee that interference will not occur in a particular installation.
If this equipment does cause interference to radio or television reception, which can be determined by turning the equipment off and on, the user is encouraged to try to correct the interference by one or more of the followings.

- Reorient the receiving antenna of radio or television.
- Relocate the Microwave oven with respect to the receiver.
- Move the microwave oven away from the receiver.
- Plug the microwave oven into a different outlet so that microwave oven and receiver are on different branch circuits.

THE MANUFACTURER is not responsible for any radio or TV interference caused by UNAUTHORIZED MODIFICATION to this microwave oven. It is the responsibility of the user to correct such interference.

GROUNDING INSTRUCTIONS

This appliance must be grounded. In the event of an electrical short circuit, the grounding plug reduces the risk of electric shock by providing an escape wire for electric current. This appliance is equipped with a cord having a grounding wire with a grounding plug. The plug must be plugged into an outlet that is properly installed and grounded.

WARNING:
Improper use of the grounding can result in a risk of electric shock.
Consult a qualified electrician or serviceman if the grounding instructions are not completely understood, or if doubt exists as to whether the appliance is properly grounded, and either :
(1) If it is necessary to use an extension cord, use only a 3-wire extension cord that has a 3-blade grounding plug, and a 3-slot receptacle that will accept the plug on the appliance. The marked rating of the extension cord shall be equal to or greater than the electrical rating of the appliance.

WARNING:
Do not cut or remove the third (ground) prong from the power cord under any circumstances.

HDUS_MCD993W,MCD993B,MCD993R_KOR9GRBW~(영).indd 3 2018-01-05 오후 1:24:21

INSTALLATION

1. **Examine the oven after unpacking.**
   Check for damage such as a misaligned door, broken door or dent in the cavity.
   If any damage is visible, DO NOT INSTALL, and notify your dealer immediately.

2. **Level, flat location.**
   Install the microwave oven on a level, flat surface.

3. **Ventilation.**
   Do not block air vents. If they are blocked during operation, the oven may overheat and eventually cause a failure.
   For proper ventilation, allow 3 inches of space between oven top, sides, rear and adjacent surfaces.

4. **Away from radio and TV sets.**
   Poor television reception and radio interference may result if the oven is located close to a TV, radio, antenna, feeder, etc.
   Place the oven as far from them as possible.

5. **Away from heating appliances and water taps.**
   Keep the oven away from heat, steam or splashing liquids. These things can adversely affect oven wiring and contacts.

6. **Power supply.**
   - Check your local power source.
     This microwave oven requires a current of approximately 12.5 amperes, 120Volts, 60Hz grounded outlet.
     1. A short power-supply cord is provided to reduce the risks resulting from becoming entangled in or tripping over a longer cord.
     2. Longer cord sets or extension cords are available and may be used if care is exercised in their use.
     3. If a long cord or extension cord is used:
        - The marked electrical rating of the cord set or extension cord should be at least as great as the electrical rating of the appliance.
        - The extension cord must be a grounding type 3-wire cord.
        - The longer cord should be arranged so that it will not drape over the counter top or tabletop where it can be pulled on by children or tripped over unintentionally.

7. **The minimum height of free space necessary above the top surface of the oven is about 4 inches.**

When use 3-pronged plug

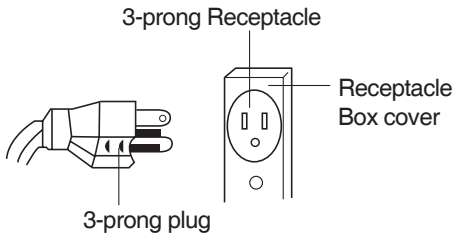

When use grounding adaptor, make sure the receptacle box is fully grounded.

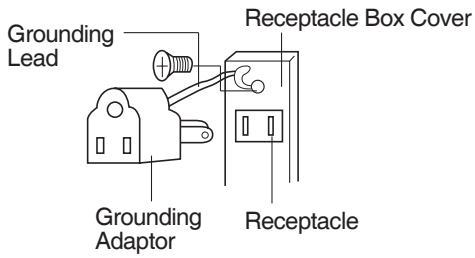

“THE CANADIAN ELECTRICAL CODE DOES NOT ALLOW THE USE OF THE GROUNDING ADAPTOR”

HDUS_MCD993W,MCD993B,MCD993R_KOR9GRBW~(영).indd 4 2018-01-05 오후 1:24:21

SPECIFICATIONS

POWER SUPPLY		120V AC, 60Hz SINGLE PHASE WITH GROUNDING
MICROWAVE	INPUT POWER	1350 W
	ENERGY OUTPUT	900 W
	FREQUENCY	2,450MHz
OUTSIDE DIMENSIONS (W x H x D)		18.3 × 11 × 14.6 in.
CAVITY DIMENSIONS (W x H x D)		12.4 × 9.3 × 13.6 in.
CAVITY VOLUME		0.9 cu.ft (26 Liters)
NET WEIGHT		APPROX. 24.7 lbs.
TIMER		59 min. 99 sec.
POWER SELECTIONS		10 Levels

** Specifications are subject to change without notice.*

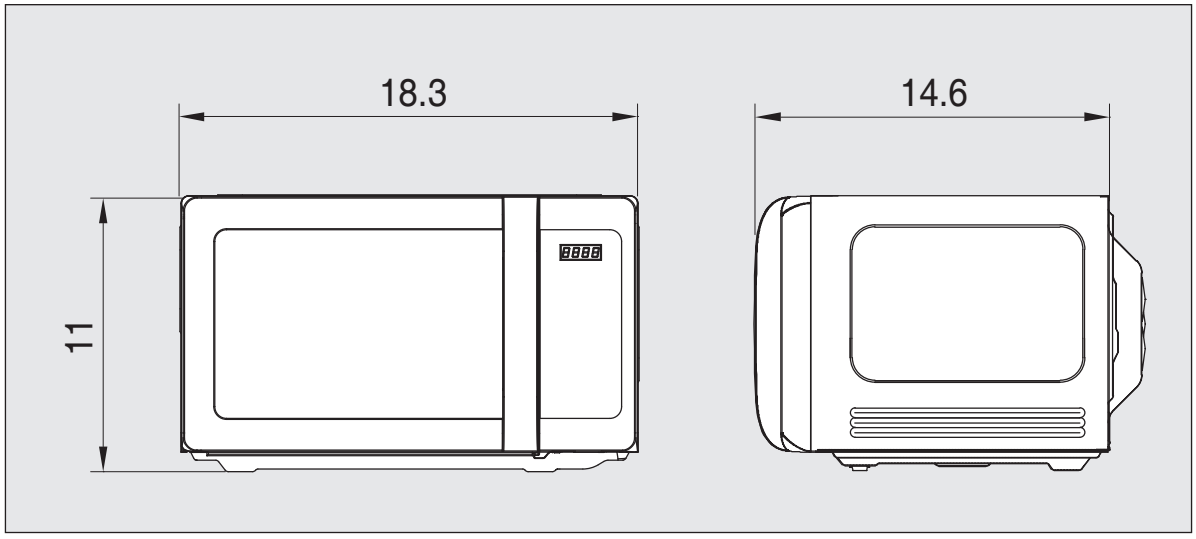

HDUS_MCD993W,MCD993B,MCD993R_KOR9GRBW~(영).indd 5 2018-01-05 오후 1:24:21

FEATURES DIAGRAM

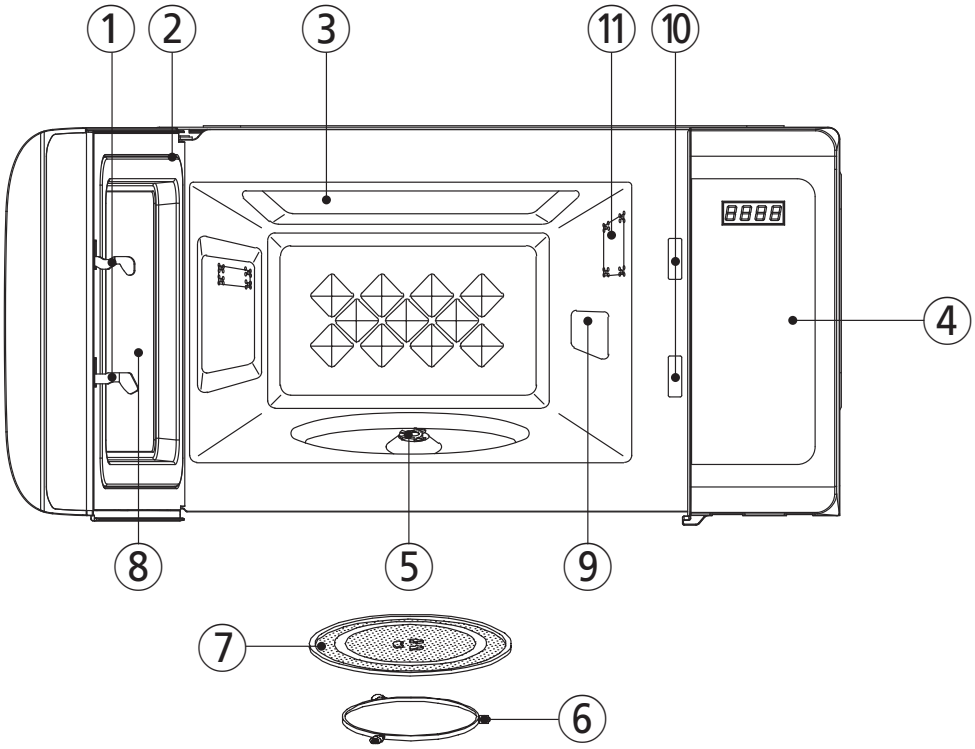

① **Door latch -** When the door is closed, it will automatically shut off. If the door is opened while the oven is operating, the magnetron will automatically shut off.

② **Door seal -** The door seal surfaces prevent microwaves escaping from the oven cavity.

③ **Oven cavity**

④ **Control panel**

⑤ **Coupler -** This fits over the shaft in the center of the oven cavity floor.
This is to remain in the oven for all cooking.

⑥ **Roller guide -** This must always be used for cooking together with the glass cooking tray.

⑦ **Glass cooking tray -** Made of special heat resistant glass. The tray must always be in proper position before operating. Do not cook food directly on the tray.

⑧ **Viewing screen -** Allows viewing of food.
The screen is designed so that light can pass through, but not the microwave.

⑨ **Waveguide cover -** Protects the microwave outlet from splashes of cooking foods.

⑩ **Safety interlock system**

⑪ **Oven lamp -** Automatically turns on during oven operating.

HDUS_MCD993W,MCD993B,MCD993R_KOR9GRBW~(영).indd 6 2018-01-05 오후 1:24:21

FEATURES DIAGRAM (continued)

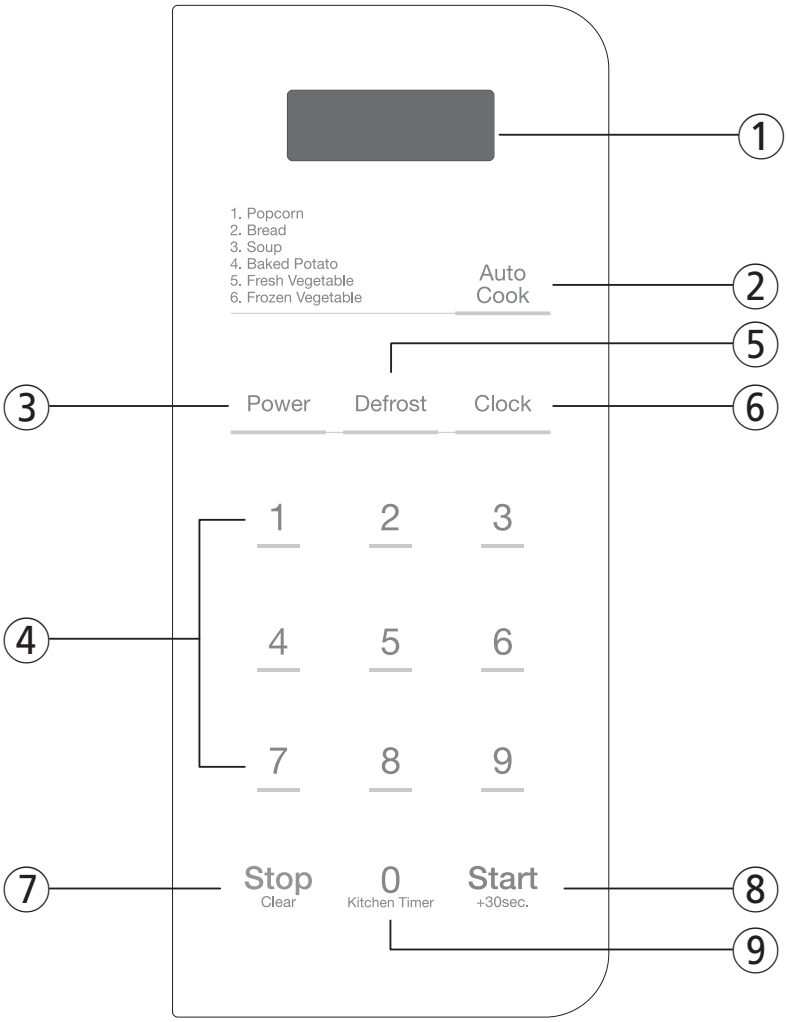

① **DISPLAY -** Cooking time, power level, indicators and current time are displayed.

② **AUTO COOK -** Used to cook some kind of popular food easily and automatically.

③ **POWER -** Used to set power level.

④ **TIME SET PAD -** Used to set the cooking time and the current time.

⑤ **DEFROST -** Used to defrost foods for weight and time.

⑥ **CLOCK -** Used to set clock.

⑦ **STOP / CLEAR -** Used to stop the oven operation or to delete the cooking data.

⑧ **START / +30 SEC -** Used to start the oven and also used to set a reheat time.

⑨ **KITCHEN TIMER -** Press and hold number "0" pad for 3 seconds to set the kitchen timer.

HDUS_MCD993W,MCD993B,MCD993R_KOR9GRBW~(영).indd 7 2018-01-05 오후 1:24:22

OPERATION PROCEDURE

This section includes useful information about oven operation.

1 Plug power supply cord into a standard 3-pronged 12 Amp, 120V AC 60Hz power outlet.

2 After placing the food in a suitable container, open the oven door and put it on the glass tray. The glass tray and roller guide must always be in place during cooking.

3 Close the door. Make sure that it is firmly closed.

4 The oven light is on when the microwave oven is operating.

5 The oven door can be opened at any time during operation by pulling the handle of door. The oven will automatically shut off.

6 Each time a pad is touched, a BEEP will sound to acknowledge the touch.

7 The oven automatically cooks on full power unless set to a lower power level.

8 The display will show “ : 0” when the oven is plugged in.

9 Time clock returns to the present time when the cooking time ends.

10 When the STOP/CLEAR pad is touched during the oven operation, the oven stops cooking and all information retained. To erase all information(except the present time), touch the STOP/CLEAR pad once more. If the oven door is opened during the oven operation, all information is retained.

11 If the START pad is touched and the oven does not operate, check the area between the door and door seal for obstructions and make sure the door is closed securely. The oven will not start cooking until the door is completely closed or the program has been reset.

Make sure the oven is properly installed and plugged into the electrical outlet.

WATTAGE OUTPUT CHART

- The power-level is set by touching the POWER LEVEL pad. The chart shows the display, the power level and the percentage of power.

Touch the POWER LEVEL pad	Power level (Display)	Approximate Percentage of Power
once	P-HI	100%
twice	P-90	90%
3 times	P-80	80%
4 times	P-70	70%
5 times	P-60	60%
6 times	P-50	50%
7 times	P-40	40%
8 times	P-30	30%
9 times	P-20	20%
10 times	P-10	10%
11 times	P-00	0%

HDUS_MCD993W,MCD993B,MCD993R_KOR9GRBW~(영).indd 8 2018-01-05 오후 1:24:22

CONTROLS

SETTING THE CLOCK

When the oven is first plugged in, the display will flash “ :0” and a tone will sound. If the AC power ever turns off, the display shows “ :0” when the power comes back on.

Clock

1. Touch the CLOCK pad.
   This is a 12 hour clock system.

2. Touch the CLOCK pad once more.
   This is a 24 hour clock system.

NOTE : This oven has multiple clock systems.
If you want 12 hour clock system, omit this step.

3. Enter the correct time of day by touching the TIME SET pads in sequence.

4. Touch the CLOCK pad.
   The display stops blinking, and the colon starts blinking. If you selected 12 hour clock system, this digital clock allows you to set from 1:00 to 12:59. If you selected 24 hour clock system, this digital clock allows you to set from 0:00 to 23:59.

NOTE: If you attempt to enter an incorrect time, the time will not be set and a error signal tone will sound. Touch the CLOCK pad and re-enter the time.

+30 sec

+30 sec allows you to reheat for 30 seconds at full power by simply touching the Start/+30sec. pad. By repeatedly touching the Start/+30sec. pad, you can also extend reheating time to 5 minutes by 30 second increments.

Start
+30sec.

1. Touch the Start/+30sec. pad.
   When you touch the +30 sec pad, ":30" is displayed.
   After 1.5 seconds, the oven starts reheating.

HDUS_MCD993W,MCD993B,MCD993R_KOR9GRBW~(영).indd 9 2018-01-05 오후 1:24:22

WEIGHT DEFROSTING

When DEFROST is selected, the automatic cycle divides the defrosting time into periods of alternating defrost and stand times by cycling on and off.

Defrost

1. Touch the DEFROST pad.
   This is the weight defrosting mode.
   The display will show you " 0.0 " .

2. Touch the TIME SET pads for inputing the desired weights.
   The display will show you what you touched.

NOTE: Your oven can be programmed for 0.4 lb. ~ 3.5lb. in Weight defrosting mode.

3. Touch the Start/+30sec. pad.

The defrosting time is automatically determined by the weight inputed.
When you touch the Start/+30sec. pad, the display counts down the time to show you how much defrosting time is left. The oven beeps during the defrosting cycle to signal that the food needs to be turn over or rearranged. When the defrosting time ends, you will hear 3 beeps.

TIME DEFROSTING

When DEFROST is selected, the automatic cycle divides the defrosting time into periods of alternating defrost and stand times by cycling on and off.

Defrost

1. Touch the DEFROST pad twice.
   This is the time defrosting mode.
   The display will show you " : 0" .

2. Touch the TIME SET pads for inputing the desired time.
   The display will show you what you touched.

NOTE: Your oven can be programmed for 59minutes 99seconds.(59:99).

3. Touch the Start/+30sec. pad.

When you touch the Start/+30sec. pad, the display counts down the time to show you how much defrosting time is left. The oven beeps during the defrosting cycle to signal that the food needs to be turn over or rearranged. When the defrosting time ends, you will hear 3 beeps.

HDUS_MCD993W,MCD993B,MCD993R_KOR9GRBW~(영).indd 10 2018-01-05 오후 1:24:22

MICROWAVE COOK

Power

1. Touch the POWER pad.
   (Please refer to the wattage output chart in page 8.)
   The display will show what you touched.
   Touch the Power level pad repeatedly to select the power level you want.

NOTE: If step 1 is omitted, the oven will cook at full power.

2. Touch the TIME SET pads for the cooking time.
   The display will show what you touched.

NOTE: Your oven can be programmed for 59 minutes 99 seconds.(59:99)

3. Touch the Start/+30sec. pad.

When you touch the Start/+30sec. pad.
The display counts down the time to show how much cooking time is left. When the cooking time ends, you will hear 3 beeps.

NOTE : Using lower power levels increases the cooking time which is recommended for foods such as cheese, milk and slow cooking of meats.

COOKING IN TWO STAGES

All recipes require frozen foods to be defrosted fully before cooking.

Defrost

1. Touch the DEFROST pad.
   (Select the weight defrosting mode or the time defrosting mode.)

2. Touch the TIME SET pads for the defrosting time or weight you want.
   The display will show what you touched.

Power

3.Touch the POWER pad.
   (Select the desired power level.)
   The display will show what you touched.

4. Touch the TIME SET pads for the desired cooking time.
   The display will show what you touched.

5. Touch the Start/+30sec. pad.

The display counts down the remaining time in defrosting. When the oven beeps, turn over or rearrange foods. When the defrosting ends, oven will beep and start microwave cook. The display counts down the remaining time in microwave cook. When M/W cook ends, you will hear 3 beeps.

HDUS_MCD993W,MCD993B,MCD993R_KOR9GRBW~(영).indd 11 2018-01-05 오후 1:24:22

AUTO COOK

AUTO COOK allows you to cook or reheat many of your favorite foods by repeatedly touching the AUTO COOK pad.
When you touch the AUTO COOK pad once, “AC-1” will be displayed. By repeatedly touching this pad, you can select other food category as shown in below.

Auto Cook

1. Touch the AUTO COOK pad once for 3.5 oz.of POPCORN.
   AC-1 will be displayed.

2. Touch the AUTO COOK pad twice for 4PCS of BREAD. AC-2 will be displayed.

3. Touch the AUTO COOK pad three times for 12 oz. of SOUP. AC-3 will be displayed.

4. Touch the AUTO COOK pad four times for 3ea of BAKED POTATO. AC-4 will be displayed.

5. Touch the AUTO COOK pad five times for 8 oz. of FRESH VEGETABLE. AC-5 will be displayed.

6. Touch the AUTO COOK pad six times for 10 oz. of FROZEN VEGETABLE. AC-6 will be displayed.
   Then touch the Start/+30sec. pad. The display will be changed into cooking time of quantity and the oven starts cooking.

When you use the AC-1, place the popcorn bag carefully so bag does not touch oven walls.
The bag may be foleded down as follows.

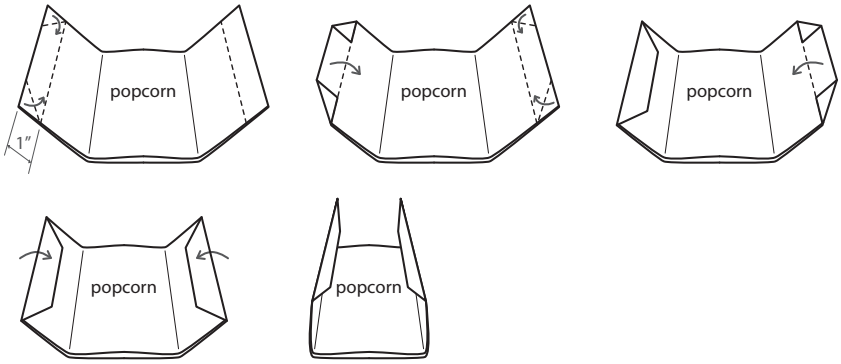

NOTE: 1. Use prepackaged room-temperature microwave popcorn.
2. Place bag in oven according to manufacturer's directions.
3. Pop only one bag at a time.
4. After popping, open bag carefully: popcorn and steam are extremely hot.
5. Do not reheat unpopped kernels or reuse bag.
6. Do not leave oven unattended while popping popcorn.

CAUTION : If prepackaged popcorn is of a different weight than the recommended weight, do not use the AUTO COOK pad. Follow the manufacturer instruction.

HDUS_MCD993W,MCD993B,MCD993R_KOR9GRBW~(영).indd 12 2018-01-05 오후 1:24:22

Kitchen Timer

This feature operates as a kitchen timer.

0
Kitchen Timer

1. Press and hold number 0 pad for 3 seconds.
   The display will show you " - - : - -".

2. Touch the TIME SET pads to set the timer.

NOTE: Your oven can be programmed for 59minutes 99seconds (59:99).

3. Touch the Start/+30sec. Pad.

When you touch the Start/+30sec. Pad, the display counts down the timer to show how much time is left.
When the timer ends, you will hear 3 beeps.

CHILD SAFETY LOCK

The safety lock prevents unwanted oven operation such as by small children.
To set, touch and hold the STOP/CLEAR pad for 3 seconds, a beep sounds.
To cancel, touch and hold the STOP/CLEAR pad for 3 seconds, a beep sounds.

TO STOP THE OVEN WHILE THE OVEN IS OPERATING

1. Touch the STOP/CLEAR pad.
   - You can restart the oven by touching the Start/+30sec. pad.
   - Touch the STOP/CLEAR pad once more to erase all instructions.
   - You must enter in new instructions.

2. Open the door.
   - You can restart the oven by closing the door and touching the Start/+30sec. pad.

NOTE: Oven stops operating when door is opened.

HDUS_MCD993W,MCD993B,MCD993R_KOR9GRBW~(영).indd 13 2018-01-05 오후 1:24:22

CARE OF YOUR MICROWAVE OVEN

The oven should be cleaned regularly and any food deposits removed.
Failure to maintain the oven in a clean condition could lead to deterioration of the surface that could adversely affect the life of the appliance and possibly result in a hazardous situation.

1 Turn the oven off before cleaning.

2 Keep the inside of the oven clean. When food spatters or spilled liquids adhere to oven walls, wipe with a damp cloth. Mild detergent may be used if the oven gets very dirty.
The use of harsh detergent or abrasives is not recommended.

3 The outside oven surface should be cleaned with soap and water, rinsed and dried with a soft cloth. To prevent damage to the operating parts inside the oven, water should not be allowed to seep into the ventilation openings.

4 If the Control Panel becomes wet, clean with a soft, dry cloth. Do not use harsh detergents or abrasives on Control Panel.

5 If steam accumulates inside or around the outside of the oven door, wipe with a soft cloth. This may occur when the microwave oven is operated under high humidity conditions and in no way indicates malfunction of the unit.

6 It is occasionally necessary to remove the glass tray for cleaning. Wash the tray in warm sudsy water or in a dishwasher.

7 The roller guide and oven cavity floor should be cleaned regularly to avoid excessive noise.
Simply wipe the bottom surface of the oven with mild detergent water or window cleaner and dry.
The roller guide may be washed in mild sudsy water.

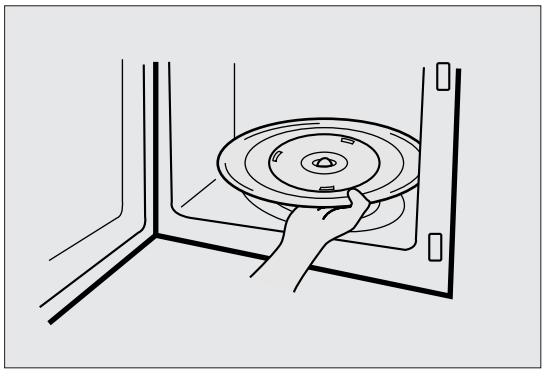

ROLLER GUIDE

1 The ROLLER GUIDE and oven floor should be cleaned frequently to prevent excessive noise.

2 The ROLLER GUIDE MUST ALWAYS be used for cooking together with the Glass Tray.

GLASS TRAY

1 DO NOT operate the oven without the Glass Tray in place.

2 DO NOT use any other Glass Tray with this oven.

3 If Glass Tray is hot, ALLOW TO COOL before cleaning or placing it in water.

4 DO NOT cook directly on the Glass Tray.
(Except for popcorn)

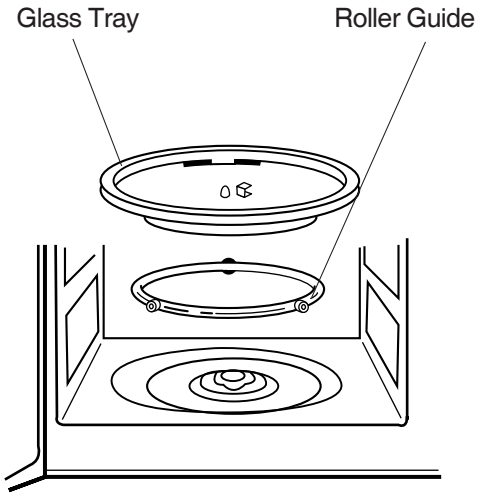

HDUS_MCD993W,MCD993B,MCD993R_KOR9GRBW~(영).indd 14 2018-01-05 오후 1:24:22

BEFORE YOU CALL FOR SERVICE

Refer to following checklist, you may prevent an unnecessary service call.

*** The oven doesn't work :**

1. Check that the power cord is securely plugged in.
2. Check that the door is firmly closed.
3. Check that the cooking time is set.
4. Check for a blown circuit fuse or tripped main circuit breaker in your house.

*** Sparking in the cavity;**

1. Check utensils. Metal containers or dishes with metal trim should not be used.
2. Check that metal skewers or foil does not touch the interior walls.
3. Check if there is dirt or grease on waveguide cover.

If there is still a problem, contact the service station.
A list of these stations is included in the oven.

CARE AND CLEANING

Although your oven is provided with safety features, it is important to observe the following:

1. It is important not to defeat or tamper with safety interlocks.
2. Do not place any object between the oven front face and the door or allow residue to accumulate on sealing surfaces. Wipe the sealing area frequently with a mild detergent, rinse and dry. Never use abrasive powders or pads.
3. When opened, the door must not be subjected to strain, for example, a child hanging on an opened door or any load could cause the oven to fall forward to cause injury and also damage to the door. Do not operate the oven if it is damaged, until it has been repaired by a competent service technician. It is particularly important that the oven closes properly and that there is no damage to the:
   i) Door(bent)
   ii) Hinges and Hookes(broken or loosened)
   iii) Door seals and sealing surfaces.
4. The oven should not be adjusted or repaired by anyone except a properly competent service technician.
5. The oven should be cleaned regularly and any food deposits removed;
6. Failure to maintain the oven in a clean condition could lead to deterioration of the surface that could adversely affect the life of the appliance and possibly result in a hazardous situation.

HDUS_MCD993W,MCD993B,MCD993R_KOR9GRBW~(영).indd 15 2018-01-05 오후 1:24:22

QUESTIONS AND ANSWERS

* **Q : I accidentally ran my microwave oven without any food in it. Is it damaged?**
  A : Running the oven empty for a short time will not damage the oven. However, it is not recommended.

* **Q : Can the oven be used with the glass tray or roller guide removed?**
  A : No. Both the glass tray and roller guide must always be used in the oven before cooking.

* **Q : Can I open the door when the oven is operating?**
  A : The door can be opened anytime during the cooking operation. Then microwave energy will be instantly switched off and the time setting will maintain until the door is closed.

* **Q : Why do I have moisture in my microwave oven after cooking?**
  A : The moisture on the side of your microwave oven is normal. It is caused by steam from cooking food hitting the cool oven surface.

* **Q : Does microwave energy pass through the viewing screen in the door?**
  A : No. The metal screen bounces back the energy to the oven cavity. The holes are made to allow light to pass through. They do not let microwave energy pass through.

* **Q : Why do eggs sometimes pop?**
  A : When baking or poaching eggs, the yolk may pop due to steam build-up inside the yolk membrane. To prevent this, simply pierce the yolk with a toothpick before cooking. Never cook eggs without piercing their shells.

* **Q : Why this standing time recommended after the cooking operation has been completed?**
  A : Standing time is very important.
  With microwave cooking, the heat is in the food, not in the oven. Many foods build up enough internal heat to allow the cooking process to continue, even after the food is removed from the oven. Standing time for joints of meat, large vegetables and cakes is to allow the inside to cook completely, without overcooking the outside.

* **Q : What does "standing time" mean?**
  A : “Standing time” means that food should be removed from the oven and covered for additional time to allow it to finish cooking. This frees the oven for other cooking.

* **Q : Why does my oven not always cook as fast as the microwave cooking guide says?**
  A : Check your cooking guide again, to make sure you’ve followed directions exactly ; and to see what might cause variations in cooking time. Cooking guide times and heat settings are suggestions, to help prevent over-cooking... the most common problem in getting used to a microwave oven. Variations in the size, shape and weights and dimensions could require longer cooking time. Use your own judgement along with the cooking guide suggestions to check whether the food has been properly cooked just as you would do with a conventional cooker.

* **Q : Will the microwave oven be damaged if it operates while empty?**
  A : Yes. Never run it empty.

* **Q : Can I operate my microwave oven without the turntable or turn the turntable over to hold a large dish?**
  A : No. If you remove or turn over the turntable, you will get poor cooking results. Dishes used in your oven must fit on the turntable.

* **Q : Is it normal for the turntable to turn in either direction?**
  A : Yes. The turntable rotates clockwise or counterclockwise, depending on the rotation of the motor when the cooking cycle begins.

* **Q : Can I pop popcorn in my microwave oven? How do I get the best results?**
  A : Yes. Pop packaged microwave popcorn following manufacture’s guidelines. Do not use regular paper bags. Use the “listening test” by stopping the oven as soon as the popping slows to a “pop” every 1 or 2 seconds. Do not repop unpopped kernels. Do not pop popcorn in glass cookware.

HDUS_MCD993W,MCD993B,MCD993R_KOR9GRBW~(영).indd 16 2018-01-05 오후 1:24:22

COOKING INSTRUCTIONS

Utensil Guide

Only use utensils that are suitable for use in microwave ovens.
To cook food in the microwave oven, the microwaves must be able to penetrate the food, without being reflected or absorbed by the dish used. Care must therefore be taken choosing the utensil. If the utensil is marked microwave-safe, you do not need to worry. The following table lists various of utensil and indicates whether and how they should be used in a microwave oven.

Utensil	Safe	Comments
Aluminium foil	▲	Can be used in small quantities to protect areas against overcooking. Arcing can occur if the foil is too close to the oven wall or if too much foil is used.
Crust plate	●	Do not preheat for more than 8minutes.
China and earthenware	●	Porcelain, pottery, glazed earthenware and bone china are usually suitable, unless deco-rated with a metal trim.
Disposable polyester cardboard dishes	●	Some frozen foods are packaged in these dishes.
Fast-food packaging		
• Polystyrene cups containers	●	Can be used to warm food. Overheating may cause the polystyrene to melt.
• Paper bags or newspaper	×	May catch fire.
• Recycled paper or metal trims	×	May cause arcing.
Glassware		
• Oven-to-table ware	●	Can be used, unless decorated with a metal trim.
• Fine glassware	●	Can be used to warm foods or liquids. Delicate glass may break or crack if heated suddenly.
• Glass jars	●	Must remove the lid. Suitable for warming only.
Metal		
• Dishes	×	May cause arcing or fire.
• Freezer bag twist ties	×	
Paper		
• Plates, cups, napkins and Kitchen paper	●	For short cooking times and warming. Also to absorb excess moisture.
• Recycled paper	×	May cause arcing.
Plastic		
• Containers	●	Particularly if heat-resistant thermoplastic. Some other plastics may warp or discolour at high temperatures. Do not use Melamine plastic.
• Cling film	●	Can be used to retain moisture. Should not touch the food.
• Freezer bags	▲	Take care when removing the film as hot steam will escape. Only if boilable or oven-proof. Should not be airtight. Prick with a fork, if necessary.
Wax or grease-proof paper	●	Can be used to retain moisture and prevent spattering.

● : Recommended use
▲ : Limited Use
× : Not Recommended

HDUS_MCD993W,MCD993B,MCD993R_KOR9GRBW~(영).indd 17 2018-01-05 오후 1:24:22

USE YOUR MICROWAVE OVEN SAFELY

General Use

Do not attempt to defeat or tamper with safety interlocks.
Do not place any object between the oven front frame and the door or allow residue to build up on sealing surfaces. Wipe with a mild detergent, rinse and dry. Never use abrasive powders or pads.
Do not subject the oven door to strain or weight such as a child hanging on an open door.
This could cause the oven to fall forward resulting in injury to you and damage to the oven.
Do not operate the oven if door seals or sealing surfaces are damaged; or if door is bent; or if hinges are loose or broken.
Do not operate the oven empty. This will damage the oven.
Do not attempt to dry clothes, newspapers or other materials in the oven. They may catch on fire.
Do not use recycled paper products as they may contain impurities which may cause sparks or fires.
Do not hit or strike the control panel with hard objects. This can damage the oven.

Food

Never use your microwave oven for home canning. The oven is not designed for proper home canning. Improperly canned food may spoil and be dangerous to consume.
Always use the minimum recipe cooking time. It is better to undercook rather than overcook foods. Undercooked foods can be returned to the oven for more cooking. If food is overcooked, nothing can be done.
Heat small quantities of food or foods with low moisture carefully. These can quickly dry out, burn or catch on fire.
Do not heat eggs in the shell. Pressure may build up and eggs can explode.
Potatoes, apples, egg yolks and sausages are examples of food with non-porous skins.
These must be pierced before cooking to prevent bursting.
Do not attempt to deep fat fry in your microwave oven.
Always allow a standing time of at least 20 seconds after the oven has been switched off to allow the temperature to even out, stir during heating, if necessary, and ALWAYS stir after heating. To prevent eruptive boiling and possible scalding, you should put a spoon or glass stick into the beverages and stir before, during and after heating.
Do not leave the oven unattended while popping corn.
Do not pop corn in a paper bag unless it is the commercially prepared Microwave Popcorn product. The kernels can overheat and ignite a brown paper bag.
Do not put packaged Microwave Popcorn bags directly on the oven tray. Place the package on a microwave safe glass or ceramic plate to avoid overheating and cracking the oven tray.
Do not exceed the Microwave Popcorn manufacturers suggested popping time.
Longer popping does not yield more popcorn but it can result in scorch, burn of fire. Remember, the Popcorn bag and tray can be too hot to handle. Remove with caution and use pot holders.

ARCING

If you see arcing, open the door and correct the problem.

Arcing is the microwave term for sparks in the oven. Arcing is caused by:

- Metal or foil touching the side of the oven.
- Foil not molded to food (upturned edges act like antennas).
- Metal, such as twist-ties, poultry pins, or gold rimmed dishes, in the microwave.
- Recycled paper towels containing small metal pieces being used in the microwave.

HDUS_MCD993W,MCD993B,MCD993R_KOR9GRBW~(영).indd 18 2018-01-05 오후 1:24:22